www.isvi-corp.com

High-Speed, High-Resolution Smart Sensor Solutions

IC-X50S-CXP
Compact Camera

IC-X50T-CXP
Thermoelectric Cooled Camera

48MP @ 30FPS

CoaXPress

- 48 Mega Pixels @ 30 fps
- Resolution 7920 x 6004
- Global Shutter 1usec~10sec
- DSNU / PRNU / DP Correction
- 2 User Areas for Calibration Storage
- CXP-6, 1/2/4-Link
- True 8/10/12 Bit Data Output
- Exposure / Strobe Delay
- GenICam, PoCXP Support
- F / M58 / M72 / Custom

CXP-6 DIN-4

Specifications

Sensor	High Speed CMOS Image Sensor - CMOSIS CMV50000
Resolution	7920(H) x 6004(V) Active Pixels
Pixel Size	4.6µm(H) x 4.6µm(V)
Frame Rate	30Hz @ 8Bit CXP-6 4CH
Active Area Size	Diameter 45.72mm, 36.43mm(H) x 27.62mm(V)
Output Format	Mono 8/10/12 and BayerRG 8/10/12
CoaXPress Interface	CXP-3, CXP-6 : 1, 2 and 4 Links, GenICam XML
Dynamic Range	64dB
Full Well Capacity	14500 e^-
SNR	41.6dB
Sensitivity	3.5 x10e7 DN/(W.s/m2) (@ 550nm)
Exposure Mode	Continuous, Trigger Timed, Trigger Width
Exposure Control	Programmable from 1 µsec to 10 sec in 1 µsec steps
Trigger Control	Programmable Period in 1 µsec steps, External PWC
Analog Control	Black Offset
Digital Control	Digital Gain, Gamma
Image Control	FFC and Defect Pixel Correction
Special Functions	Programmable Exposure & Strobe Delay Programmable Region of Interest (H & V) and Subsampling User FFC and DPC Calibration and Saving
Lens Mounts	F-Mount, M58, M72, Custom OEM
Operating Temperature	0℃ ~ 40℃, ext. temp. possible with reduced performance
Storage Temperature	-10℃ ~ 70℃
Relative Humidity	20% ~ 90% non-condensing
Shock / Vibration	25G (Half sine 6-10ms XYZ) / 10G (5-150Hz, 1min, XYZ)
Power Requirements	24VDC ± 10%, 18W, ≤ 50mV Ripple
Power over CXP	PoCXP : 24VDC @ 18W, min. required CXP Links = 2 ch (CXP1,2)
Dimensions (H x W x L)	80mm x 80mm x 36.55mm without lens mount and connectors
Weight	400g (without lens mount), 540g (include F-Mount)
Compliancy	CoaXPress 1.0, GenICam SFNC, RoHS, CE, FCC

* All specifications subject to change without notice.

Connector

Power Connector

PIN No.	I/O	Signal Name
1, 2, 3	VCC	+24VDC
4, 5, 6	GND	Ground

◇Connector: Hirose HR10A-7R-6S ◇Mating Connector: Hirose HR10A-7P-6P

Control Connector

PIN No.	I/O	Signal Name	PIN No.	I/O	Signal Name
1	Input	+Trigger	3	Output	+Strobe
2	Input	-Trigger	5	GND	Ground
4, 6 - 12	Reserved - Do Not Connect				

◇Connector: Hirose HR10A-10R-12S ◇Mating Connector: Hirose HR10A-10P-12P

CoaXPress Connector

CXP0 CXP1 CXP2 CXP3

Mating Connector 75Ω DIN 1.0/2.3 Type
IEC 61169-29 Standard male type (plug)

9mm pitch

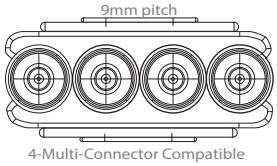

4-Multi-Connector Compatible

Dimensions

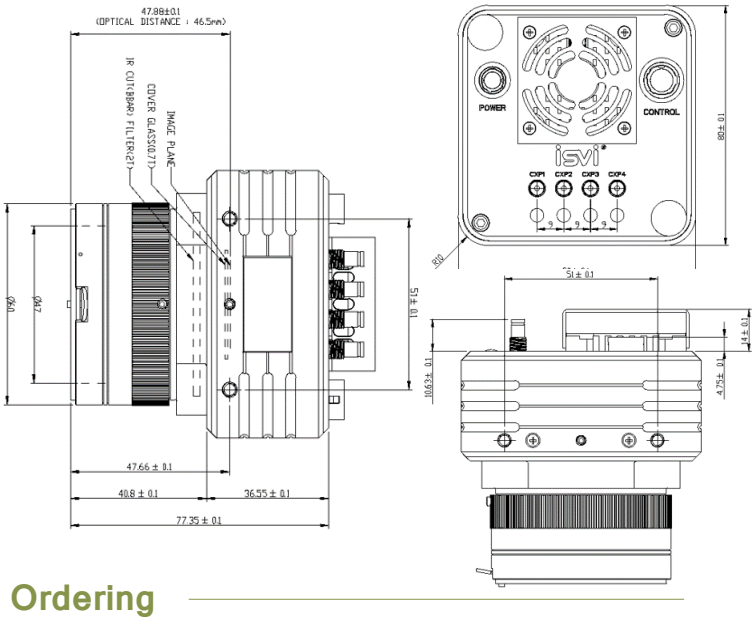

Spectral Response

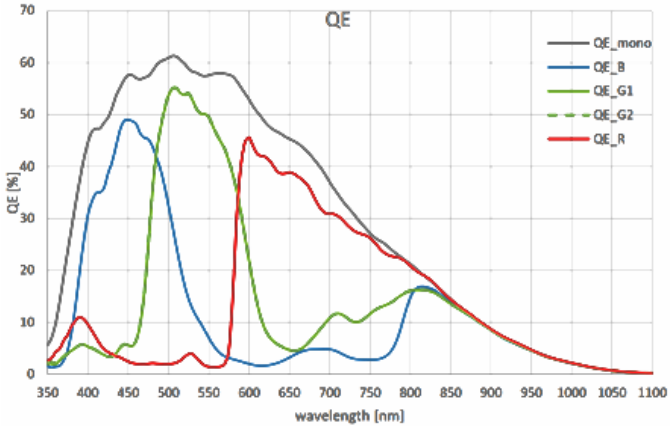

Ordering

I C - X 50S - C X P - X X X

Chroma	Lens Mount**	Filter**
M = Monochrome **C** = Color Bayer CFA	**FM** = F-Mount **58** = M58x0.75 **72** = M72x0.75	**B** = BBAR* **I** = IR Cut* **N** = None

* Monochrome standard with BBAR filter
Color Bayer standard with IR Cut filter
** Custom OEM available

www.isvi-corp.com

ISVI Korea (Headquarters)
#103-808 SK Ventium Bldg., 166 Gosan-ro,
Gunpo-si, Gyenggi-do, 15850, S. Korea
T +82-31-427-3243 E sales@isvi-corp.com

TECHWAY SIGNAL VISION SYSTEM
info@techway.fr
+33 (0)1 64 53 37 90
19 Avenue de Norvège
91140 Villebon sur Yvette
FRANCE
www.techway.fr

ISVI est distribué par TECHWAY S.A.S. - www.techway.fr - info@techway.fr - +33 1 64 53 37 90